SERVER
• ESSENTIALS •

262.628.5600 | 800.558.8722
spsales@server-products.com

07949

Server Express Pump

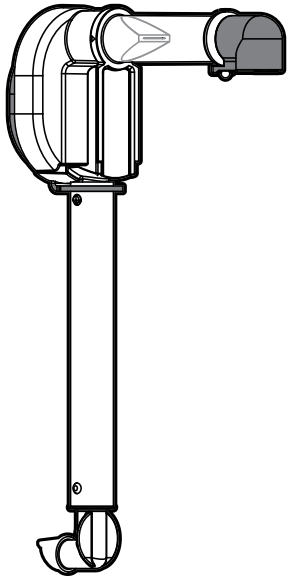

Complete View for Reference

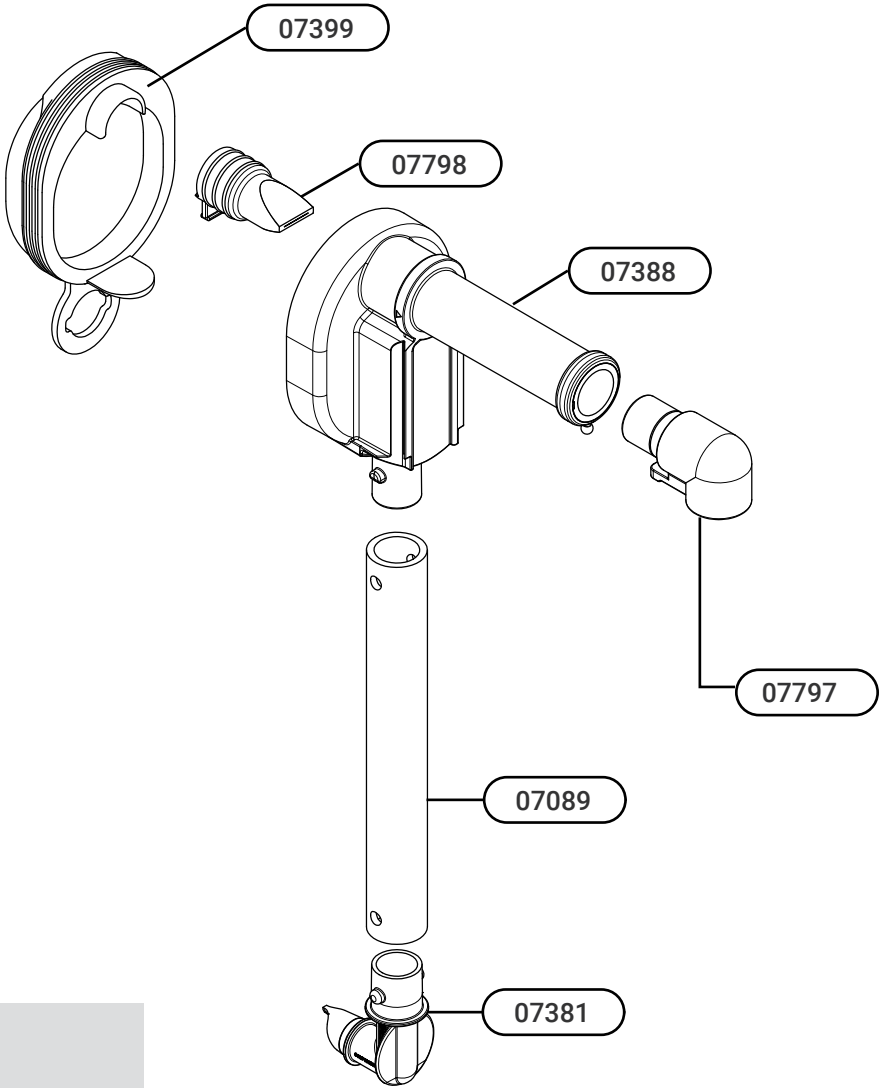

PART	QTY	DESCRIPTION
07399	1	PUMP DOME, BLUE
07798	1	LARGE PINCH VALVE
07388	1	PUMP HOUSING
07089	1	7" TUBE
07381	1	CONNECTOR, 16MM
07797	1	DISCHARGE FITTING, .394, LG.

©2022 Server Products Inc.