SERVER
• ESSENTIALS •

262.628.5600 | 800.558.8722
spsales@server-products.com

88779

SlimLine DFD-2L, no bracket

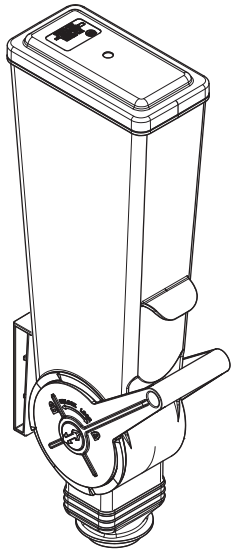

Complete View for Reference

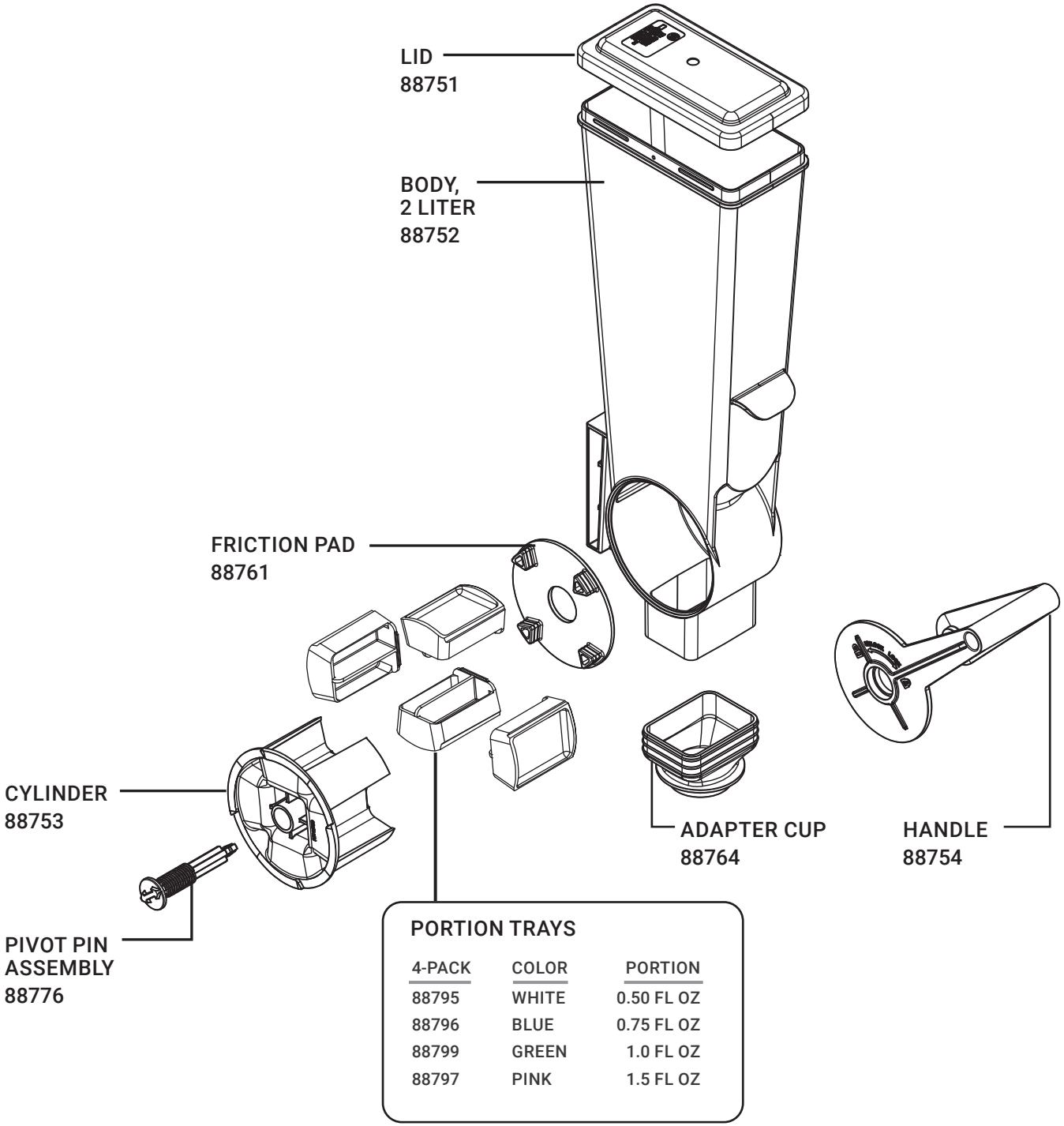

PORTION TRAYS

4-PACK	COLOR	PORTION
88795	WHITE	0.50 FL OZ
88796	BLUE	0.75 FL OZ
88799	GREEN	1.0 FL OZ
88797	PINK	1.5 FL OZ

SERVER
INTELLIGENT BY DESIGN

©2022 Server Products Inc.